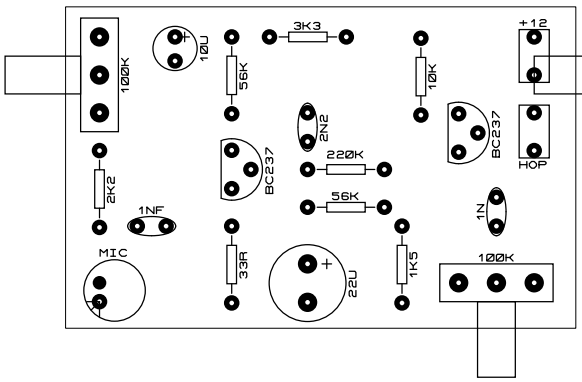
100K
10U
3K3
56K
10K
+12
2N2
BC237
220K
BC237
HOP
2K2
1NF
56K
1N
MIC
33R
22U
1K5
100K

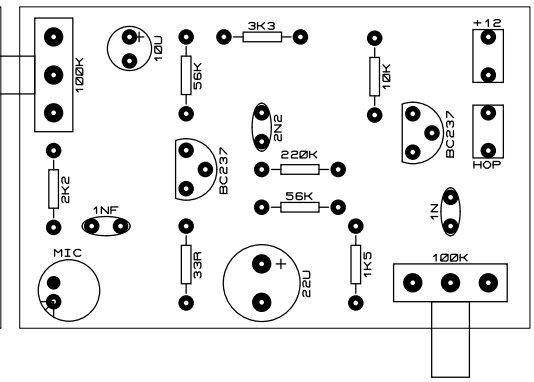
100K
10U
3K3
56K
10K
+12
2N2
BC237
220K
BC237
HOP
2K2
1NF
56K
1N
MIC
33R
22U
1K5
100K

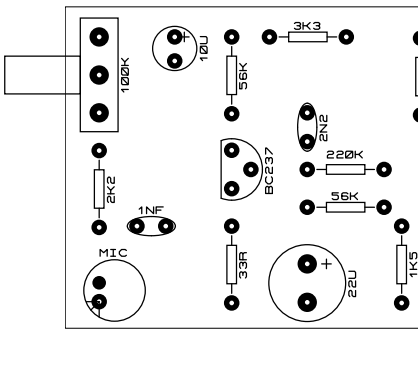
100K
10U
3K3
56K
2N2
BC237
220K
2K2
1NF
56K
MIC
33R
22U
1K5

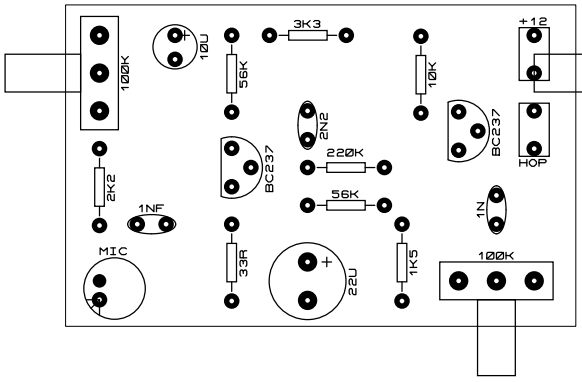
100K
10U
3K3
56K
10K
+12
2N2
BC237
220K
BC237
HOP
2K2
1NF
56K
1N
MIC
33R
22U
1K5
100K

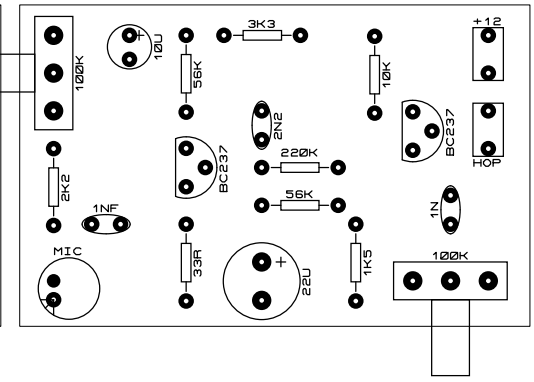
100K
10U
3K3
56K
10K
+12
2N2
BC237
220K
BC237
HOP
2K2
1NF
56K
1N
MIC
33R
22U
1K5
100K

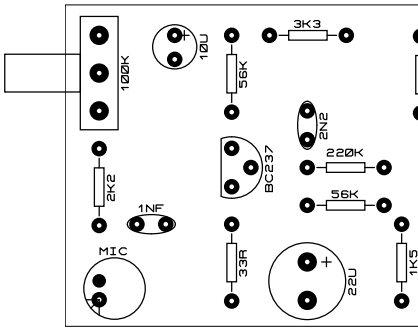
100K
10U
3K3
56K
2N2
BC237
220K
2K2
1NF
56K
MIC
33R
22U
1K5

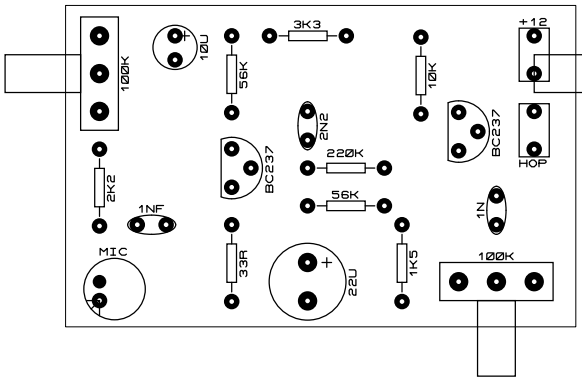
100K
10U
3K3
56K
10K
+12
2N2
BC237
220K
BC237
HOP
2K2
1NF
56K
1N
MIC
33R
22U
1K5
100K

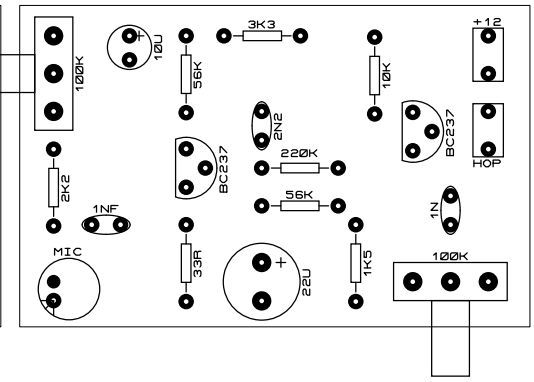
100K
10U
3K3
56K
10K
+12
2N2
BC237
220K
BC237
HOP
2K2
1NF
56K
1N
MIC
33R
22U
1K5
100K

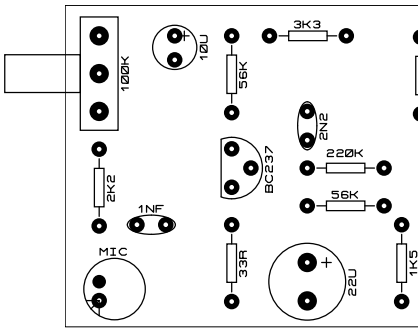
100K
10U
3K3
56K
2N2
BC237
220K
2K2
1NF
56K
MIC
33R
22U
1K5

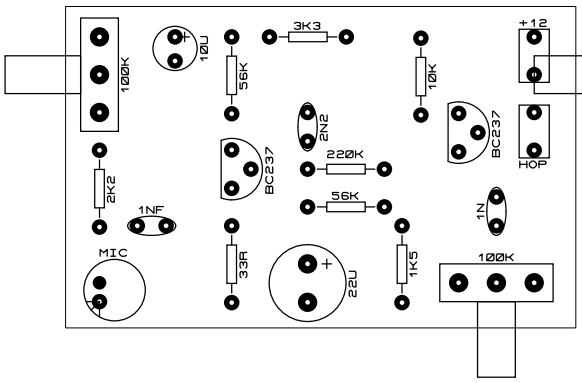
100K
10U
3K3
56K
10K
+12
2N2
BC237
220K
BC237
HOP
2K2
1NF
56K
1N
MIC
33R
22U
1K5
100K

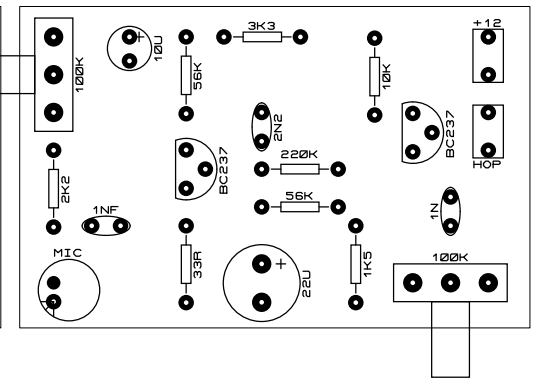
100K
10U
3K3
56K
10K
+12
2N2
BC237
220K
BC237
HOP
2K2
1NF
56K
1N
MIC
33R
22U
1K5
100K

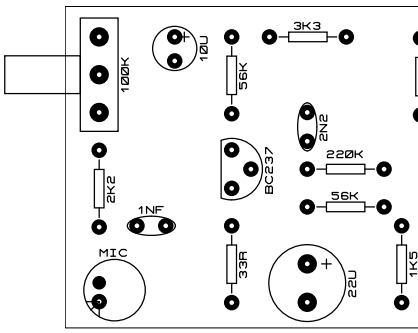
100K
10U
3K3
56K
2N2
BC237
220K
2K2
1NF
56K
MIC
33R
22U
1K5

100K
10U
3K3
56K
10K
+12
2N2
BC237
220K
BC237
HOP
2K2
1NF
56K
1N
MIC
33R
22U
1K5
100K

100K
10U
3K3
56K
10K
+12
2N2
BC237
220K
BC237
HOP
2K2
1NF
56K
1N
MIC
33R
22U
1K5
100K

100K
10U
3K3
56K
2N2
BC237
220K
2K2
1NF
56K
MIC
33R
22U
1K5